FIRST ANGLE PROJECTION (ALL DIMENSIONS IN MILLIMETRES)

ALL DIMENSIONS ARE IN MILLIMETRES

DRAWING No. 2-80-655-16076

05-228/C

CAUTION THE INFORMATION ON THIS DOCUMENT IS THE PROPERTY OF BHARAT HEAVY ELECTRICALS LTD. IT MUST NOT BE USED DIRECTLY OR INDIRECTLY IN ANY WAY DETRIMENTAL TO THE INTEREST OF THE COMPANY.

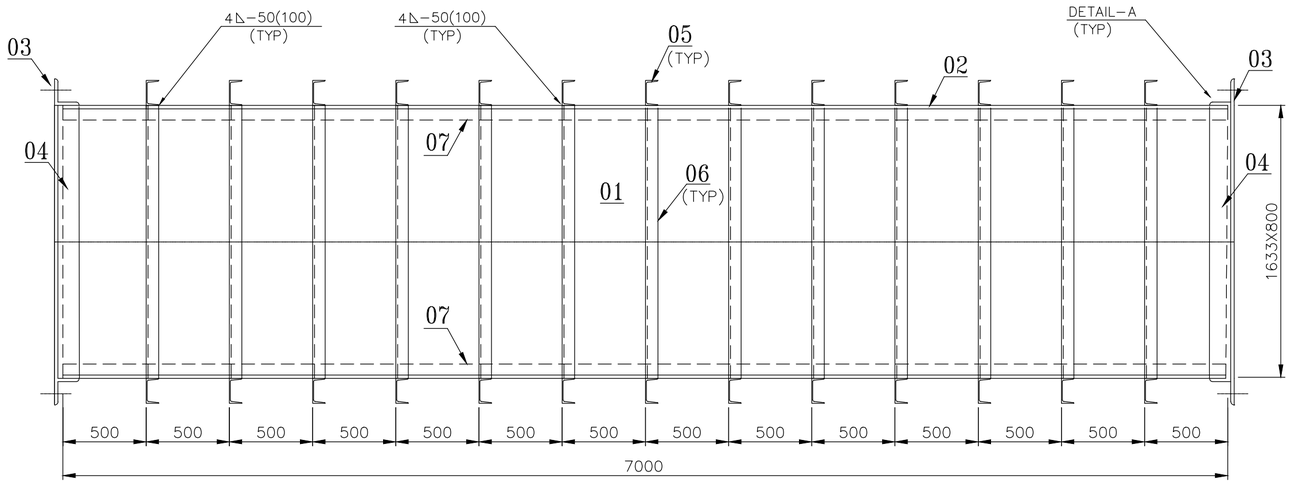

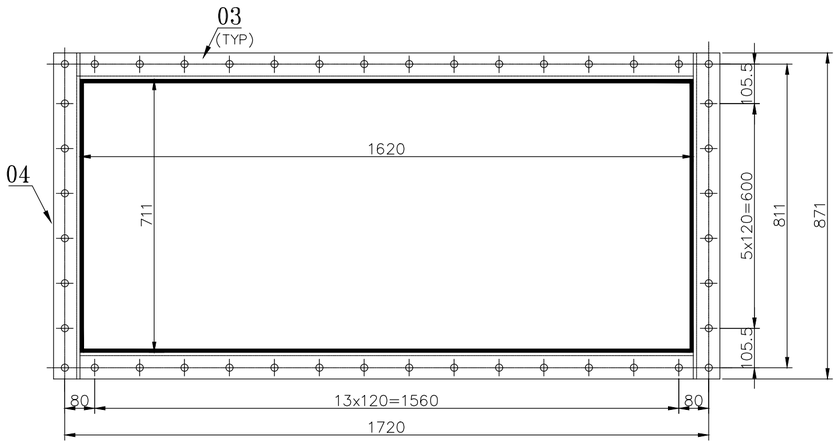

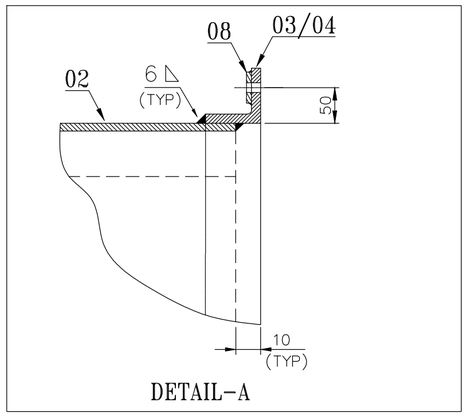

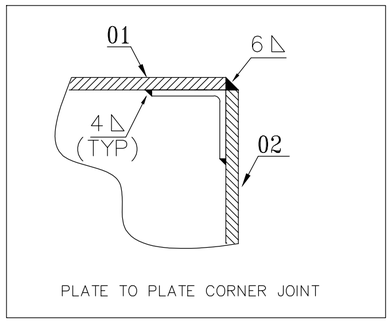

NOTES:

1. FOR WELDING, ER70S-2/E6010/E6013 ELECTRODE TO BE USED.
2. THREADS SHALL BE UNIFIED(UNC FOR UPTO 1" DIA) AS PER ASME B1.1 WITH CLASS 2A FIT FOR STUDS AND CLASS 2B FIT FOR NUTS.
3. FOLLOW APPLICABLE QP AND PAINTING SCHEDULE FOR THE PROJECT.

ITEM NO.	DESCRIPTION	DRAWING NO.	ITEM NO. / VAR NO.	MATERIAL CODE / MATERIAL SPEC.	A / C	UNIT WT. / QTY.
08	PLATE THK.12			–		0.200
	50X50			ASTM A 283 GRC		44
07	ANGLE 75X75X6			150130050000		47.450
	L=6980			ASTM A 283 GRC		4
06	ISMC 150			–		26.242
	L=1562			IS2062 E250A		26
05	ISMC 150			–		10.970
	L=653			IS2062 E250A		26
04	FLANGE PLATE 120X80X10			–		25.140
	L=1620			ASTM A 283 GRC		4
03	FLANGE PLATE 120X80X10			–		13.330
	L=871			ASTM A 283 GRC		4
02	PLATE 6 THK			–		233.740
	711X6980			ASTM A 283 GRC		2
01	PLATE 6 THK			–		532.580
	1620X6980			ASTM A 283 GRC		2

CUSTOMER: INDIAN OIL CORPORATION LIMITED (HALDIA)

CONSULTANT: ENGINEERS INDIA LIMITED (EIL) NEW DELHI

NAME OF PROJECT: BS-VI, HALDIA

BHEL CUSTOMER NO: 7419

BHARAT HEAVY ELECTRICALS LTD., PIPING CENTRE, CHENNAI 600 017

	NAME	SIGN	DATE	NO OF ITEMS
DRN	S.RAJU	-sd-	15.03.19	
CHD	TRINADHA RAO	-sd-	15.03.19	
APPD	R.SESHAGIRI	-sd-	15.03.19	

REV	DATE	ALTERED / APPROVED
01		

ZONE

N

DEPT. / CODE: GRADE OF UN TOL. DIM C/M/F | SCALE | WEIGHT (Kg). | ITEM No.

TITLE: SQUARE DUCT 64"x28", 6 MM THK

EIL DRAWING NO:

CARD CODE: U 01

DRAWING No.: 2-80-655-16076

REV: 00

SIZE A2

V: A2